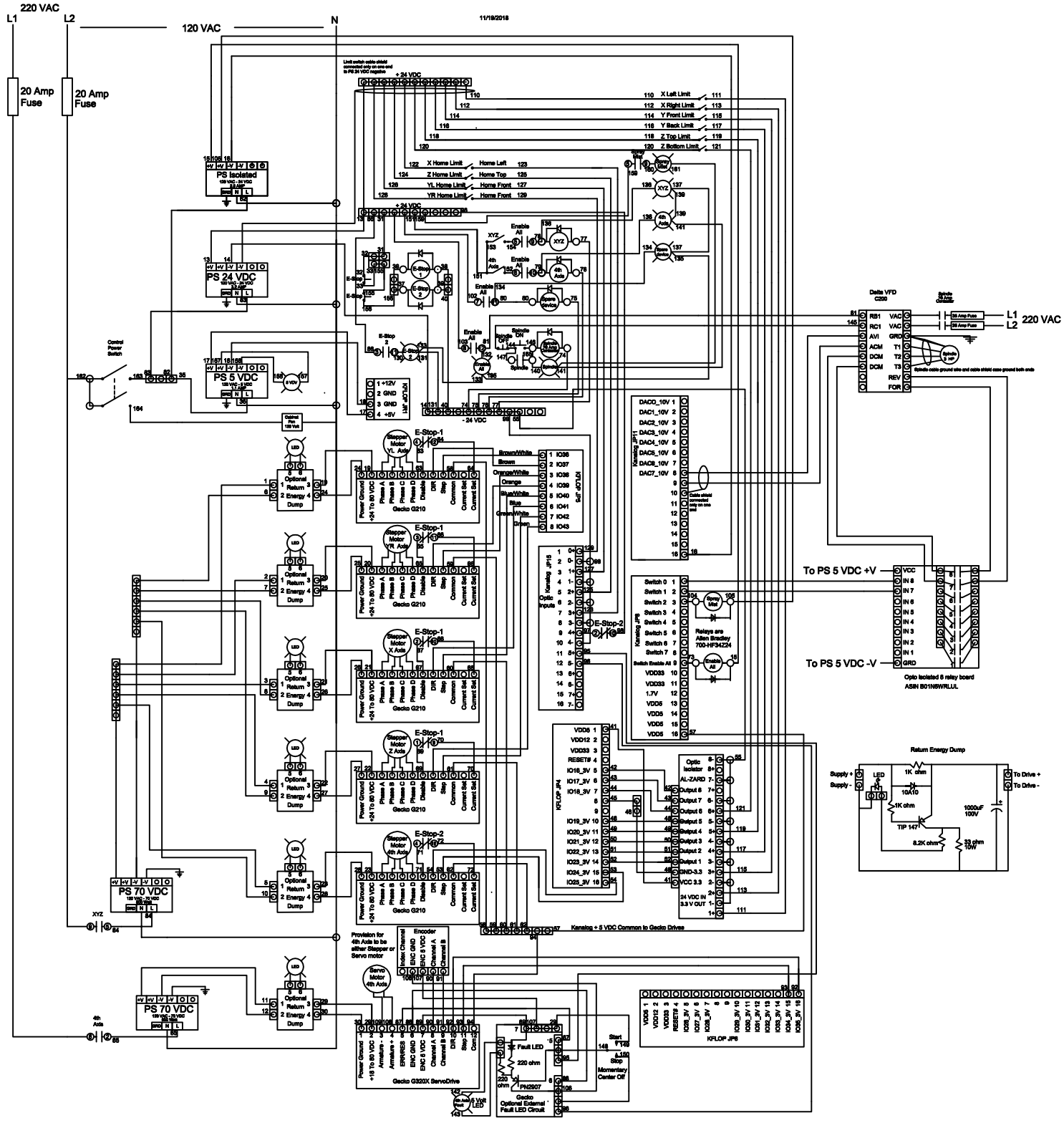

220 VAC
L1
L2
120 VAC
N
11/19/2018
20 Amp Fuse
20 Amp Fuse
Limit switch cable shield connected only on one end to PS 24 VDC negative
+ 24 VDC
X Left Limit
X Right Limit
Y Front Limit
Y Back Limit
Z Top Limit
Z Bottom Limit
X Home Limit
Z Home Limit
YL Home Limit
YR Home Limit
Home Left
Home Top
Home Front
Home Front
PS Isolated
PS 24 VDC
PS 5 VDC
Control Power Switch
Cabinet Fan 120 Volt
- 24 VDC
KFLOP JP1
KFLOP JP5
Kanalog JP11
Kanalog JP15
Kanalog JP8
Kanalog + 5 VDC Common to Gecko Drives
Delta VFD C200
Spindle 75 Amp Contactor
35 Amp Fuse
35 Amp Fuse
Spindle 3 HP
Spindle cable ground wire and cable shield case ground both ends
Cable shield connected only on one end
Relays are Allen Bradley 700-HF34Z24
To PS 5 VDC +V
To PS 5 VDC -V
Opto isolated 8 relay board ASIN B01N6WRLUL
Return Energy Dump
Supply +
Supply -
LED
1K ohm
10A10
1K ohm
TIP 147
8.2K ohm
33 ohm 10W
1000uF 100V
To Drive +
To Drive -
Optic Isolator
AL-ZARD
24 VDC IN 3.3 V OUT
KFLOP JP4
KFLOP JP6
Gecko G210
Gecko G320X ServoDrive
Stepper Motor YL Axis
Stepper Motor YR Axis
Stepper Motor X Axis
Stepper Motor Z Axis
Stepper Motor 4th Axis
Optional Return Energy Dump
Power Ground
+24 To 80 VDC
Phase A
Phase B
Phase C
Phase D
Disable
DIR
Step
Common
Current Set
Provision for 4th Axis to be either Stepper or Servo motor
Servo Motor 4th Axis
Encoder
Index Channel
ENC GND
ENC 5 VDC
Channel A
Channel B
Fault LED
220 ohm
PN2907
Gecko Optional External Fault LED Circuit
Start
Stop Momentary Center Off
5 Volt LED
4th Axis
XYZ
E-Stop-1
E-Stop-2