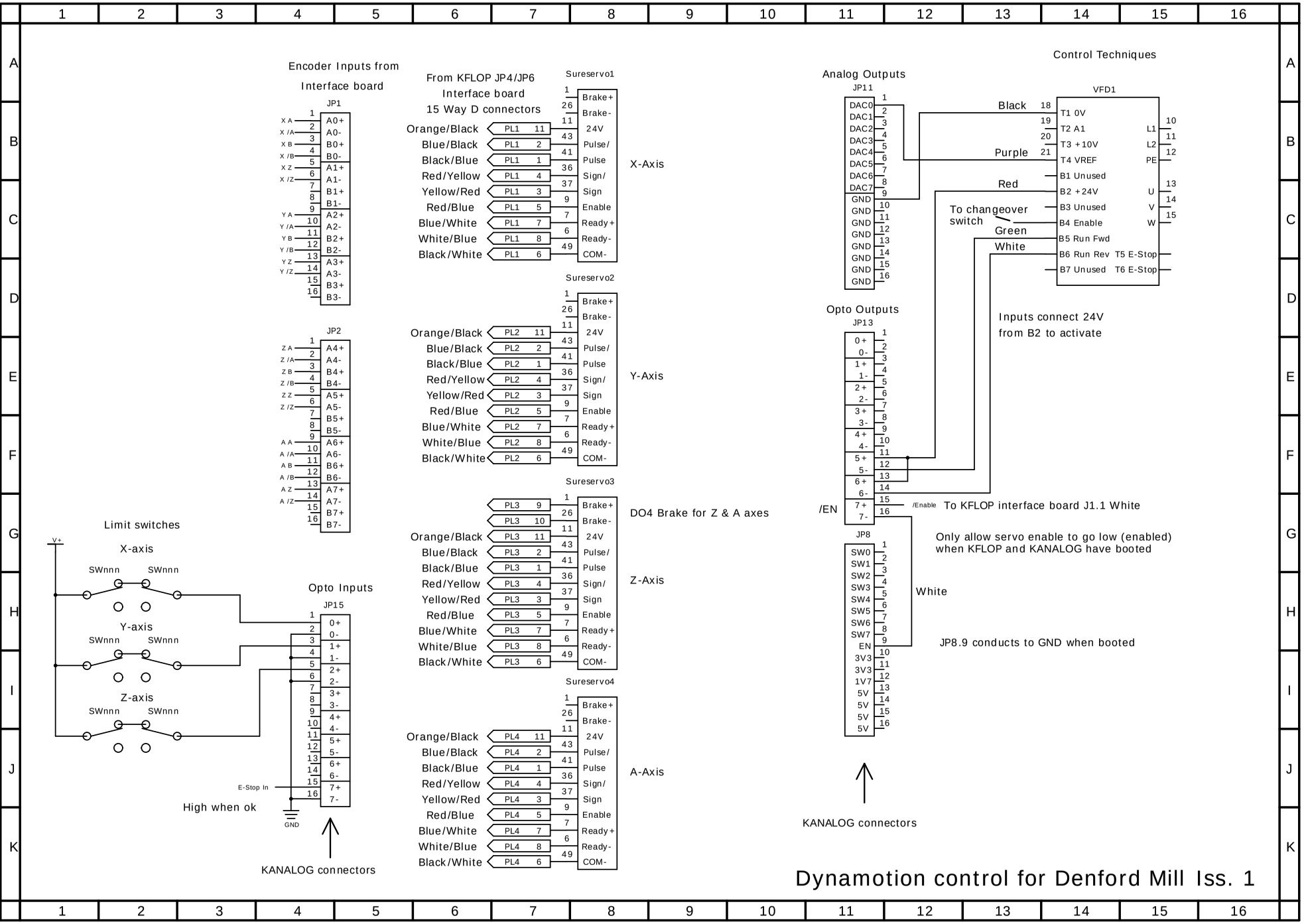
Encoder Inputs from
Interface board
JP1
A0+ A0- B0+ B0- A1+ A1- B1+ B1- A2+ A2- B2+ B2- A3+ A3- B3+ B3-
X A X /A X B X /B X Z X /Z Y A Y /A Y B Y /B Y Z Y /Z
JP2
A4+ A4- B4+ B4- A5+ A5- B5+ B5- A6+ A6- B6+ B6- A7+ A7- B7+ B7-
Z A Z /A Z B Z /B Z Z Z /Z A A A /A A B A /B A Z A /Z
From KFLOP JP4/JP6
Interface board
15 Way D connectors
Sureservo1
Orange/Black PL1 11
Blue/Black PL1 2
Black/Blue PL1 1
Red/Yellow PL1 4
Yellow/Red PL1 3
Red/Blue PL1 5
Blue/White PL1 7
White/Blue PL1 8
Black/White PL1 6
Brake+ Brake- 24V Pulse/ Pulse Sign/ Sign Enable Ready+ Ready- COM-
X-Axis
Sureservo2
Orange/Black PL2 11
Blue/Black PL2 2
Black/Blue PL2 1
Red/Yellow PL2 4
Yellow/Red PL2 3
Red/Blue PL2 5
Blue/White PL2 7
White/Blue PL2 8
Black/White PL2 6
Y-Axis
Sureservo3
PL3 9
PL3 10
Orange/Black PL3 11
Blue/Black PL3 2
Black/Blue PL3 1
Red/Yellow PL3 4
Yellow/Red PL3 3
Red/Blue PL3 5
Blue/White PL3 7
White/Blue PL3 8
Black/White PL3 6
DO4 Brake for Z & A axes
Z-Axis
Sureservo4
Orange/Black PL4 11
Blue/Black PL4 2
Black/Blue PL4 1
Red/Yellow PL4 4
Yellow/Red PL4 3
Red/Blue PL4 5
Blue/White PL4 7
White/Blue PL4 8
Black/White PL4 6
A-Axis
Limit switches
V+
X-axis
SWnnn SWnnn
Y-axis
SWnnn SWnnn
Z-axis
SWnnn SWnnn
Opto Inputs
JP15
0+ 0- 1+ 1- 2+ 2- 3+ 3- 4+ 4- 5+ 5- 6+ 6- 7+ 7-
E-Stop In
High when ok
GND
KANALOG connectors
Analog Outputs
JP11
DAC0 DAC1 DAC2 DAC3 DAC4 DAC5 DAC6 DAC7 GND GND GND GND GND GND GND GND
Control Techniques
VFD1
T1 0V
T2 A1
T3 +10V
T4 VREF
B1 Unused
B2 +24V
B3 Unused
B4 Enable
B5 Run Fwd
B6 Run Rev
B7 Unused
T5 E-Stop
T6 E-Stop
L1 L2 PE U V W
Black
Purple
Red
To changeover switch
Green
White
Inputs connect 24V
from B2 to activate
Opto Outputs
JP13
0+ 0- 1+ 1- 2+ 2- 3+ 3- 4+ 4- 5+ 5- 6+ 6- 7+ 7-
/EN
/Enable
To KFLOP interface board J1.1 White
Only allow servo enable to go low (enabled)
when KFLOP and KANALOG have booted
JP8
SW0 SW1 SW2 SW3 SW4 SW5 SW6 SW7 EN 3V3 3V3 1V7 5V 5V 5V 5V
White
JP8.9 conducts to GND when booted
KANALOG connectors
Dynamotion control for Denford Mill Iss. 1