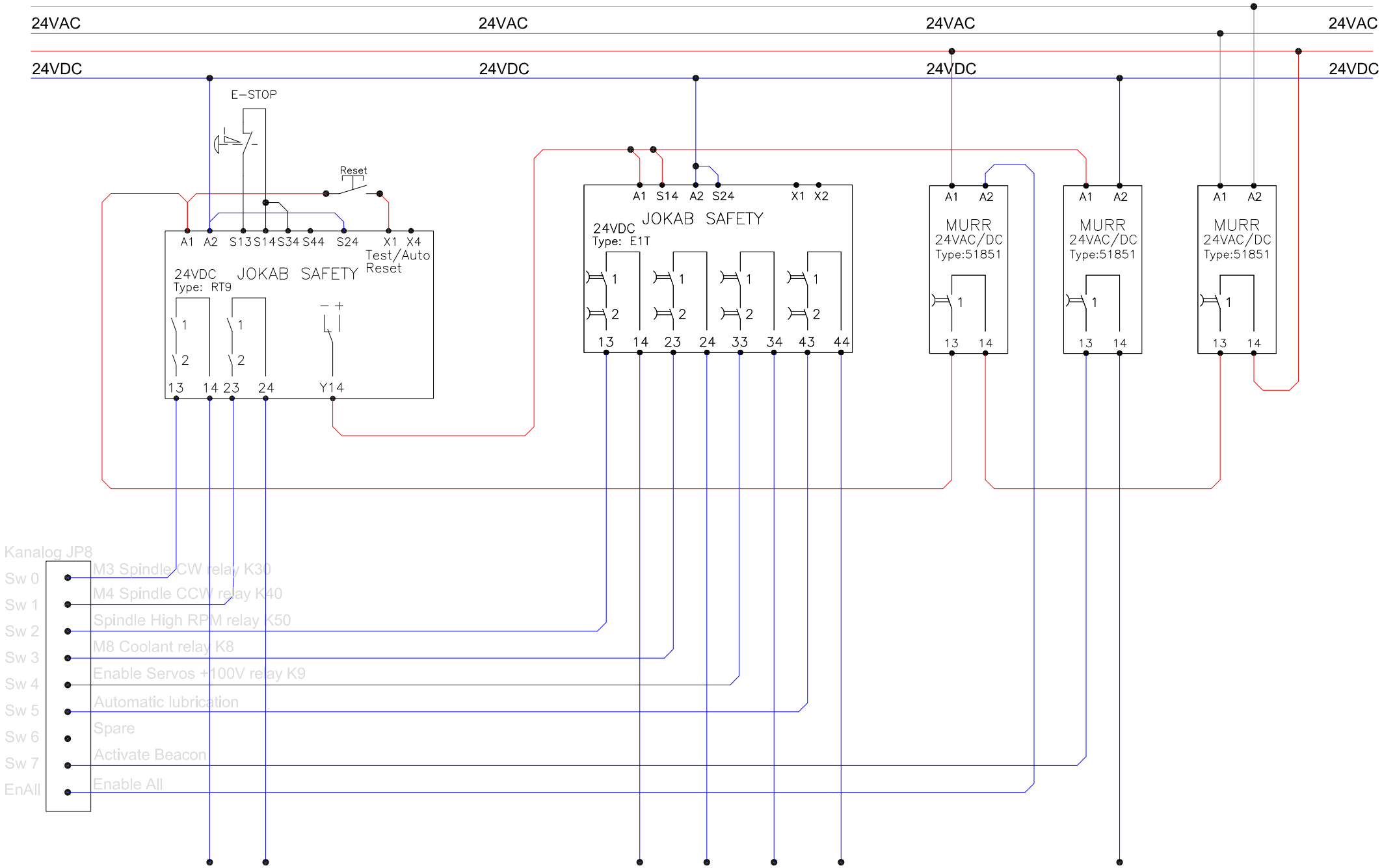
24VAC
24VAC
24VAC
24VAC
24VDC
24VDC
24VDC
24VDC
E-STOP
Reset
A1 A2 S13 S14 S34 S44 S24 X1 X4
Test/Auto
Reset
24VDC
Type: RT9
JOKAB SAFETY
13 14 23 24 Y14
A1 S14 A2 S24 X1 X2
24VDC
Type: E1T
JOKAB SAFETY
13 14 23 24 33 34 43 44
A1 A2
MURR
24VAC/DC
Type:51851
13 14
A1 A2
MURR
24VAC/DC
Type:51851
13 14
A1 A2
MURR
24VAC/DC
Type:51851
13 14
Kanalog JP8
Sw 0
Sw 1
Sw 2
Sw 3
Sw 4
Sw 5
Sw 6
Sw 7
EnAll
M3 Spindle CW relay K30
M4 Spindle CCW relay K40
Spindle High RPM relay K50
M8 Coolant relay K8
Enable Servos +100V relay K9
Automatic lubrication
Spare
Activate Beacon
Enable All

rev. 2